AiM GT32 Standalone

Steering Wheel Open version

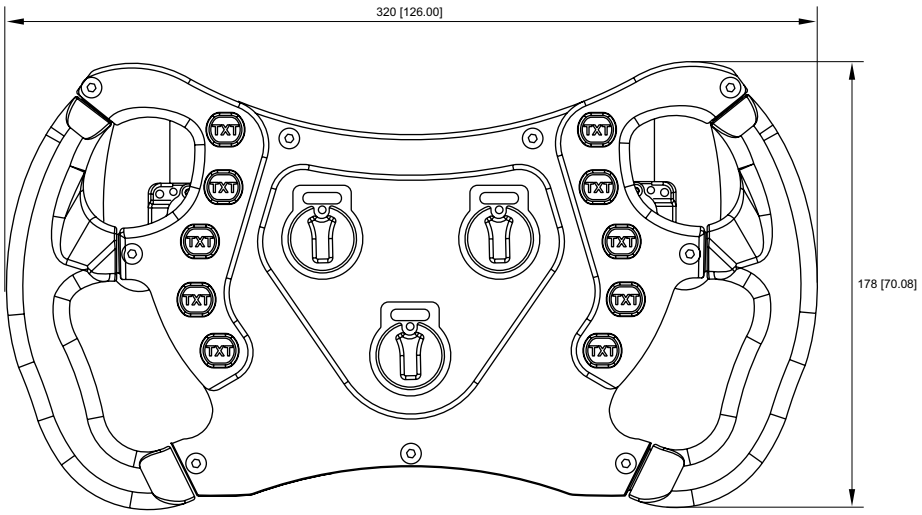

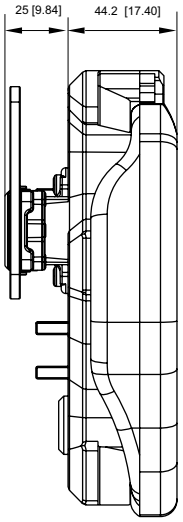

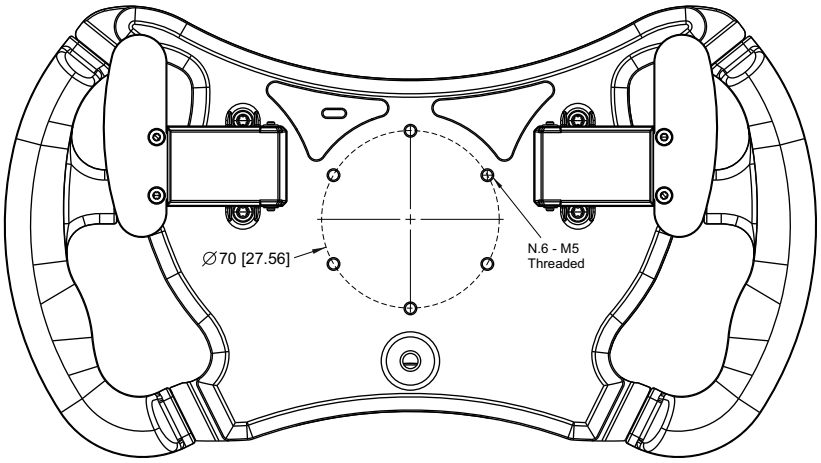

Dimensions in mm [inches]

Technical specifications

Diameter	320 mm
CAN connection	1
Body	Anodized aluminum
Pushbuttons	10 pushbuttons (all with RGB backlights)
Rotary switches	3 rotary switches (all with RGB backlights)
Connectors	1 Autosport 22 pins male connector + USB-C connector
Dimensions	320 x 178 x 44.2 mm
Weight	2,600 g
Power consumption	500 mA
Waterproof	IP65

Pinout

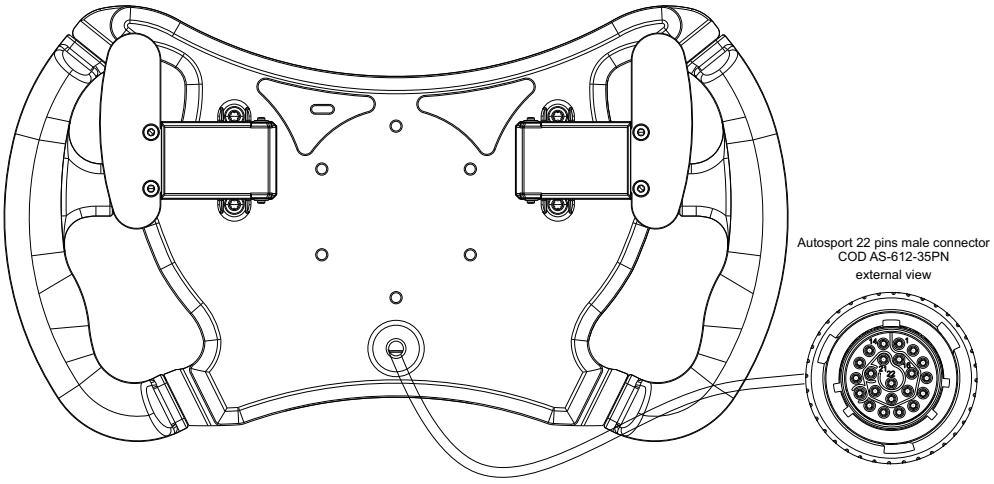

PIN	SIGNAL
1	9-15V Power in
2	NC
3	NC
4	Paddle sh Left
5	Paddle sh Right
6	Paddle sh COM
7	Function button 2
8	NC
9	NC
10	Function button 1
11	Reserved
12	Reserved
13	CAN H
14	GND
15	CAN L
16	Reserved
17	NC
18	Function button 2
19	GND
20	Function button 1
21	Reserved
22	Reserved

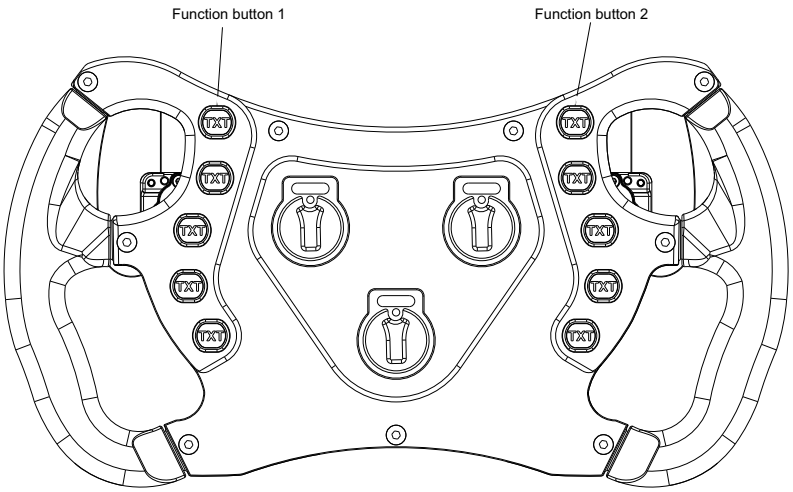

All other push buttons and all rotary switches on CAN BUS

Connections

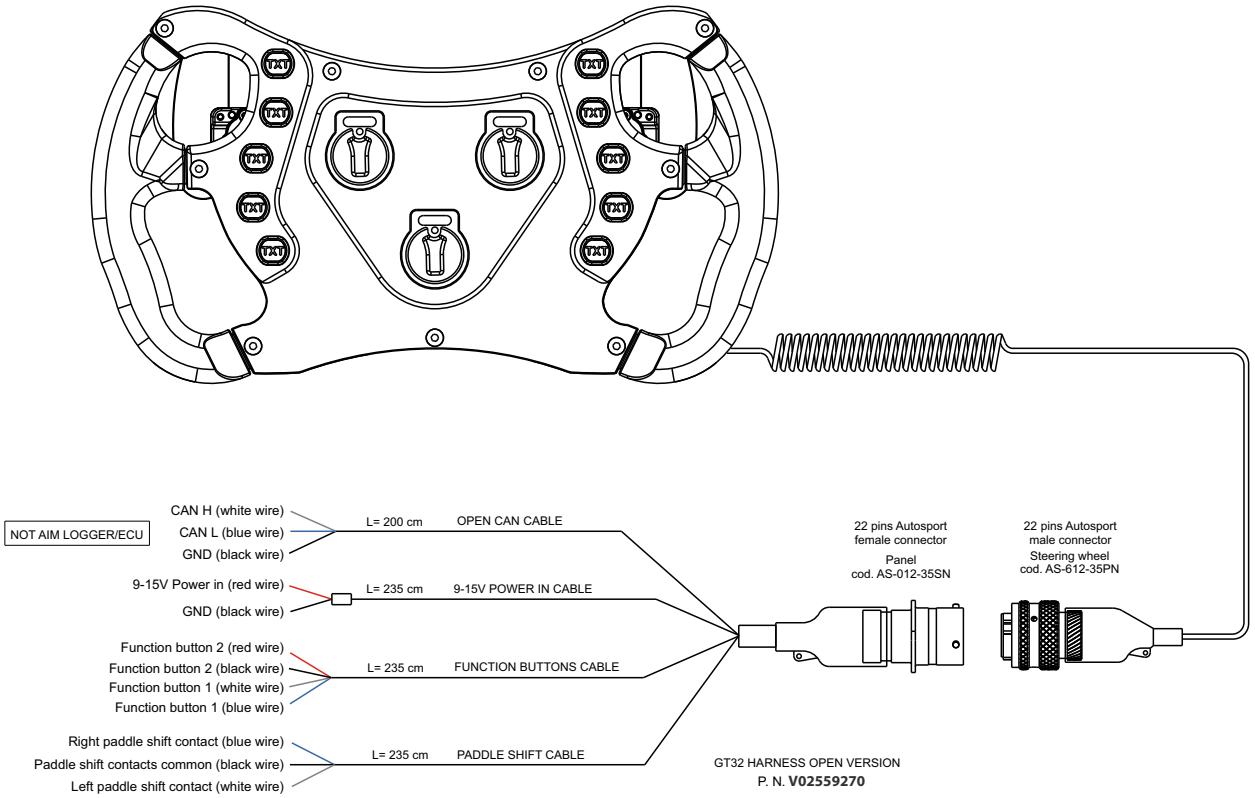

EXTERNAL POWER SUPPLY IS ALWAYS REQUIRED

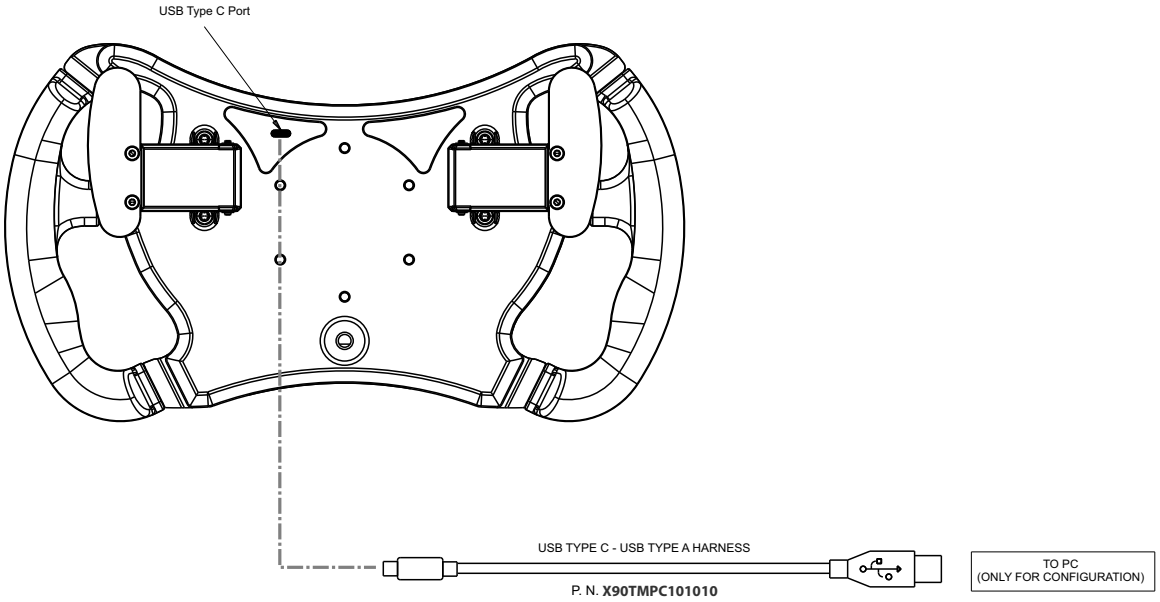

AiM GT32 Standalone

Steering Wheel Open version

Part numbers

Description	Part number	The kit contains
GT32 Steering Wheel Standalone version + USB Type C - USB Type A Harness	**X07GT32O0**	GT32 Steering Wheel Standalone version USB Type C - USB Type A Harness
GT32 Steering Wheel Standalone version + GT32 Harness Open version + USB Type C - USB Type A Harness	**X07GT32OH**	GT32 Steering Wheel Standalone version GT32 Harness Open version 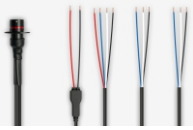 USB Type C - USB Type A Harness
GT32 Steering Wheel Standalone version + Paddle Shift + USB Type C - USB Type A Harness	**X07GT32O0P**	GT32 Steering Wheel Standalone version Paddle Shift USB Type C - USB Type A Harness
GT32 Steering Wheel Standalone version + Paddle Shift + GT32 Harness Open version + USB Type C - USB Type A Harness	**X07GT32OHP**	GT32 Steering Wheel Standalone version Paddle Shift GT32 Harness Open version 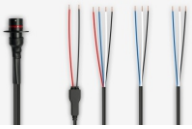 USB Type C - USB Type A Harness

Accessories

Description	Part number	
PaddleShift Right&Left	**X07PS**	
GT32 Harness Open version	**V02559270**	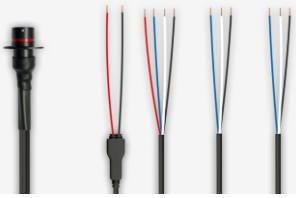
USB Type C - USB Type A Harness	**X90TMPC101010**	